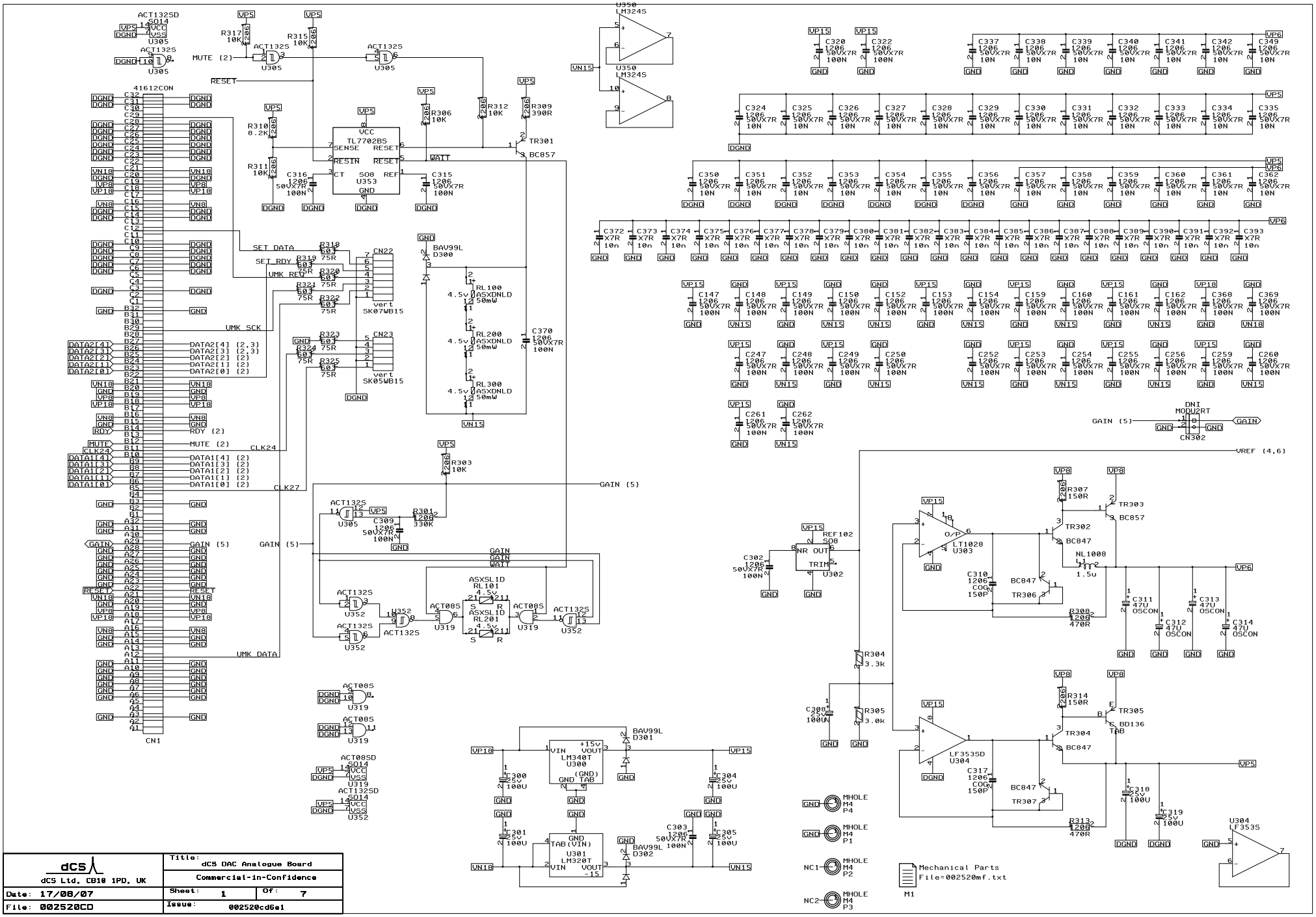

dCS Ltd, CB10 1PD, UK	Title: dCS DAC Analogue Board	
	Commercial-in-Confidence	
Date: 17/08/07	Sheet: 1	Of: 7
File: 002520CD	Issue: 002520cd6e1	